PEARL OD-05

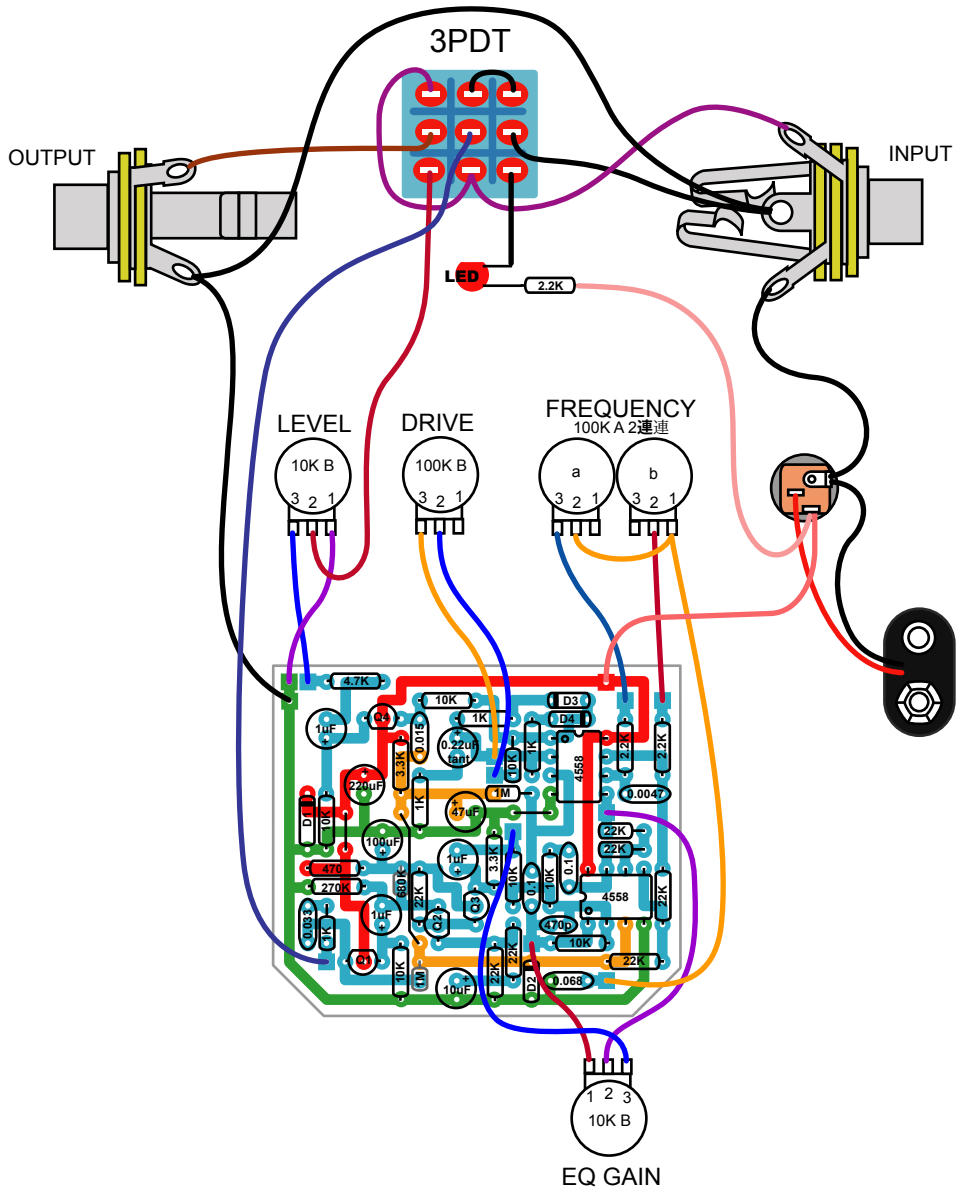

3PDT
OUTPUT
INPUT
LED
2.2K
LEVEL
10K B
DRIVE
100K B
FREQUENCY
100K A 2連連
a
b
EQ GAIN
10K B