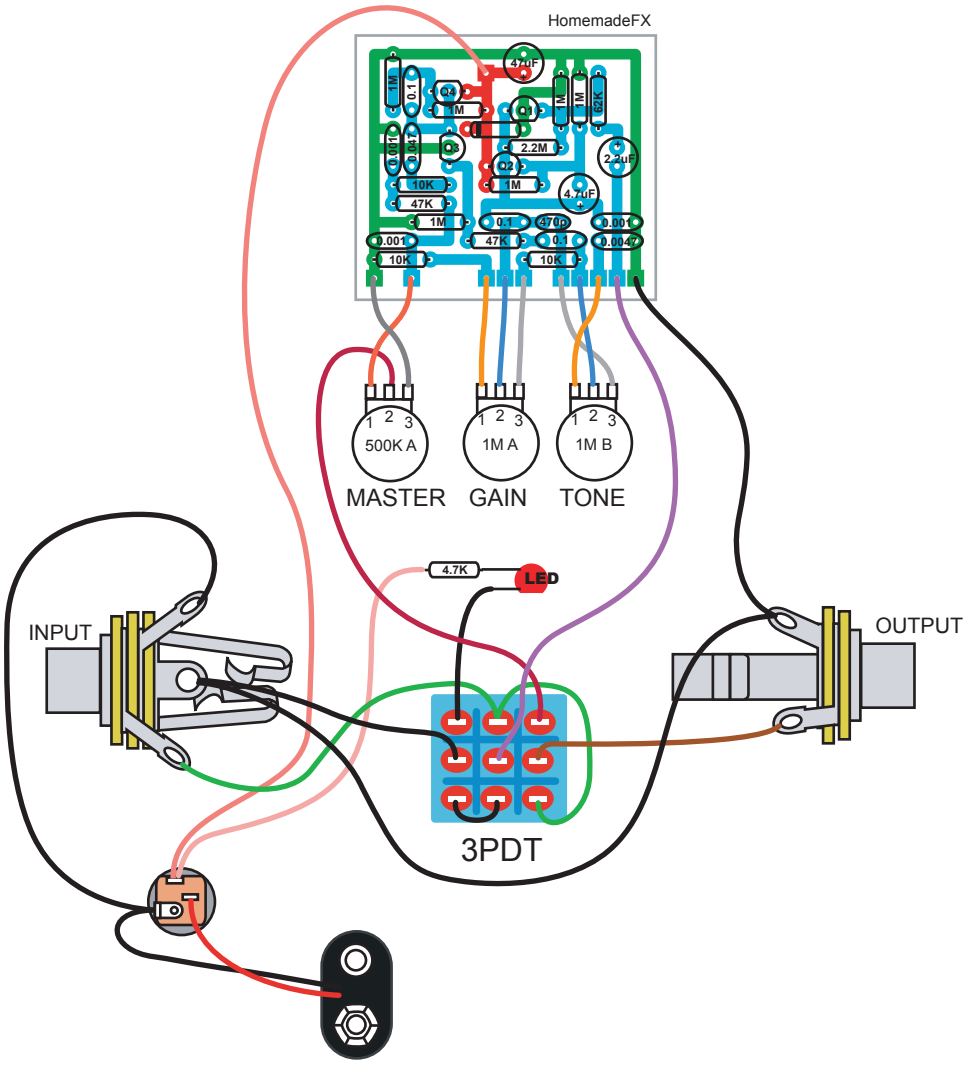Catalinbread
Formula No.5